Induction Motor Control System of Electric Vehicle with Improved Dynamics in Field Weakening Region

Bogdan Pryymak
Dept. of Automation of Electromechanical Systems and the Electric Drive
Igor Sikorsky Kyiv Polytechnic Institute
Kyiv, Ukraine
b.i.pryymak@gmail.com

***Abstract*— The paper is devoted to the study of induction motor (IM) control system of electric vehicle (EV) with improved dynamics in the high speed region. The new algorithm of field weakening control was developed, which provides the IM torque maximization and high quality of controlled processes. The expanded IM mathematical model and EV motion model have been presented. The genetic algorithm has been applied for numerical IM torque optimization. The objective of IM torque maximization is an increased intensity of the EV acceleration and braking intervals. The studies have been carried on with EV mass and stator current limit changes. In test EV, the acceleration time has been reduced by 30-50%, while the braking time – by 5-16%. The present results prove the fact that important effects are to be achieved due to the suggested EV IM control system.**

Keywords—induction motor; vector control; field weakening; torque maximization; optimization; constraints; electric vehicle

I. Introduction

Dynamic behavior of Electric Vehicles (EV), determines the maneuvering capability and, therefore, is of great importance. There are two main ways to improve EV dynamic behavior. The first is to increase the power of the motor and inverter. However, the drawbacks involved are increased cost and weight of EV. The second way is to improve the control system in order to achieve maximum efficiency of the electric drive operation. As this approach does not have the drawbacks mentioned above, we will apply it in our research.

In Induction Motor (IM) control process, the torque maximization in the field weakening region is possible under conditions of voltage and current limitation. The maximum voltage is determined by EV on-board power source. The maximum current in modern Voltage Inverters Source (VSI) can be 1.5-2 times higher than the rated value for a short period of time (for a few tens of seconds). During this period EV can either accelerate or brake with increased intensity. Meanwhile, the excess of IM rated power for a short period of time will not result in significant heating.

The classic algorithm of the field weakening involves stabilization of rotor electromotive force by means of inversely proportional flux and motor speed changes [1]. However, in this case IM torque does not exceed its maximum.

Many scientific works are devoted to the problem of improving IM properties in the field weakening region [2-8]. The systems described in these papers can be divided into two classes. The first one is the direct field weakening control system [2-4], the second one is the indirect field weakening control system operated by means of the closed circuit of stator voltage [5-8].

The significant advantage of the first-class systems is the capability to achieve high accuracy of torque maximization by calculation of optimal flux graph and the practical application of the graph as a look-up table. The disadvantage of these systems is the parametric sensitivity that can be solved by adaptation. The main advantage of the second-class systems is the insensibility to voltage changes of inverter supply. However, in these systems the idealized IM model is used, which neglects the stator resistance, causes the torque optimization task to be solved only approximately. Moreover, the systems need an auxiliary controller in the stator voltage circuit [6], which increases the adjustment complexity.

The work [9] studies the potentialities of IM torque optimization in field weakening region. On the basis of the results obtained in [9] the aim of this paper is to build the EV IM control system with torque maximization at field weakening and to study the properties of the test EV.

The first and second parts of this paper present the mathematical model of IM, the numerical solution of motor torque optimization, and the EV movement model. The third part demonstrates the IM control system diagram and suggests the optimal algorithm for field weakening control. In the fourth part, the EV IM control system model has been developed, and the research has been carried out. The results obtained demonstrate a substantial reduction of acceleration and braking time periods and distances for the EV.

II. Mathematical Model and Torque Optimization of IM

A. Mathematical model of induction motor

To obtain more realistic investigation results, instead of idealized mathematical description of IM, we use extended description taking into account the saturation of main flux and magnetic loss in machine iron. Considering iron loss in reference frame *(d,q)* directed by rotor flux linkage vector, IM with squirrel-cage rotor can be described by differential equation system [9]

$$dI_{sd}/dt = L_{s\sigma}^{-1}\Big[-(R_s+R_z)I_{sd} - R_z L_{r\sigma}^{-1}\Psi_{rd} + \\ + T_z^{-1}L_r L_{r\sigma}^{-1}\Psi_{md} + U_{sd}\Big] + \omega_0 I_{sq};$$

$$dI_{sq}/dt = L_{s\sigma}^{-1}\left[-(R_s+R_z)I_{sq}+T_z^{-1}L_rL_{r\sigma}^{-1}\Psi_{mq}+U_{sq}\right]-\omega_0 I_{sd};$$

$$d\Psi_{rd}/dt = T_{r\sigma}^{-1}\left(-\Psi_{rd}+\Psi_{md}\right); \quad (1)$$

$$d\Psi_{md}/dt = R_z\left(I_{sd}+\Psi_{rd}/L_{r\sigma}-L_rL_m^{-1}L_{r\sigma}^{-1}\Psi_{md}\right)+\omega_0\Psi_{mq};$$

$$d\Psi_{mq}/dt = R_z\left(I_{sq}-L_rL_m^{-1}L_{r\sigma}^{-1}\Psi_{mq}\right)-\omega_0\Psi_{md};$$

$$d\omega/dt = J_r^{-1}(M_e-M_L),$$

where variables are generalized stator vector components – $\overline{U}_s=\left[U_{sd},U_{sq}\right]^T$, stator current – $\overline{I}_s=\left[I_d,I_q\right]^T$, rotor flux linkage – $\overline{\Psi}_r=\left[\Psi_{rd},\Psi_{rq}\right]^T$, main flux linkage – $\overline{\Psi}_m=\left[\Psi_{md},\Psi_{mq}\right]^T$; ω_0 is the angular speed of the rotor flux vector or the reference frame (d,q); z_p is the number of pole pairs; ω is the angular speed of rotor; R_s, R_r are the stator and rotor resistances, respectively; $R_z=R_z(\omega_0,\omega)$ is the equivalent resistance, which reflects the losses in machine iron; L_m – is the mutual inductance; $L_{r\sigma}$ is the rotor leakage inductance; $L_r=L_m+L_{r\sigma}$ is the self rotor inductance; $T_{r\sigma}=L_{r\sigma}/R_r$, $T_z=L_m/R_z$; M_e, M_L are the electromagnetic and load torques, respectively; J_r is the rotor inertia. Taking into account that in the (d,q) reference frame $\Psi_{rd}=\Psi_r=\left|\overline{\Psi}_r\right|$, the electromagnetic torque of IM and the speed of rotor flux vector in (1) are calculated as

$$M_e = 1.5 z_p L_{r\sigma}^{-1}\Psi_r\Psi_{mq}, \quad (2)$$

$$\omega_0 = z_p\omega+\Psi_{mq}/(T_{r\sigma}\Psi_r). \quad (3)$$

In (1) the saturation of the main flux linkage $\Psi_m=\left|\overline{\Psi}_m\right|$ can consider [9, 10] using nonlinear function $L_m=L_m(\Psi_m)$, which is obtained from the magnetization curve of the IM.

B. Optimisation of IM torque in field weakening region

The maximum torque of IM is determined by the maximum current and voltage of the power inverter that feeds the motor. In short-term operation the maximum current of the inverter can be one and a half – twice more. Maximum output voltage of the inverter with PWM (Pulse Width Modulation) is determined by the method of modulation and the DC-link voltage U_{dc}. If is used a common method currently SVM (Space Vector Modulation) [1], in the linear zone of inverter control the maximum amplitude of phase voltage is equal

$$U_{max}=U_{dc}/\sqrt{3}.$$

Hence, the IM description should be complemented by limits of the stator voltage $U_s=\left|\overline{U}_s\right|$ and current $I_s=\left|\overline{I}_s\right|$ as

$$0\le U_s\le U_{max}; \quad 0\le I_s\le I_{max}. \quad (4)$$

A classic algorithm of the field weakening has the form

$$\Psi_{rc}(\omega)=\begin{cases}\Psi_{rn}, & if \quad |\omega|\le\omega_n;\\ \Psi_{rn}\omega_n/|\omega|, & if \quad |\omega|>\omega_n,\end{cases} \quad (5)$$

where ω_n, Ψ_{rn} are the rated rotor speed and flux, respectively.

The task of optimizing electromagnetic torque of motor in the field weakening region can be formulated as follows: for IM described by (1) – (3) and taking into account constraints (4) at intervals $0<|\omega|\le\omega_{max}$, $0<\Psi_r\le\Psi_{rn}$ for the criterion $M_e\Rightarrow max$ we find the optimal rotor flux $\Psi_{ro}(\omega)$ in motor mode $\Psi_{ro}(\omega)=\Psi_{ro}^m(\omega)$ and generator mode $\Psi_{ro}(\omega)=\Psi_{ro}^g(\omega)$, where ω_{max} is the maximum rotor speed.

It is obvious that the task of maximizing the torque of IM based on non-linear description (1)–(4) can be solved only numerically. For that purpose, we apply a genetic algorithm. For the numerical studies the data of standard motor of 30 kW was used. Its parameters are given in Table AI. The results of IM torque optimization are presented in Fig. 1 and Fig. 2. Stator voltage limit is equal to 1 p.u., that is $U_{max}=311\,\text{V}$, which conforms with $U_{dc}=540\,\text{V}$, but stator current limit is equal to 1.5 p.u., that is $I_{max}=1.5I_n=120\,\text{A}$.

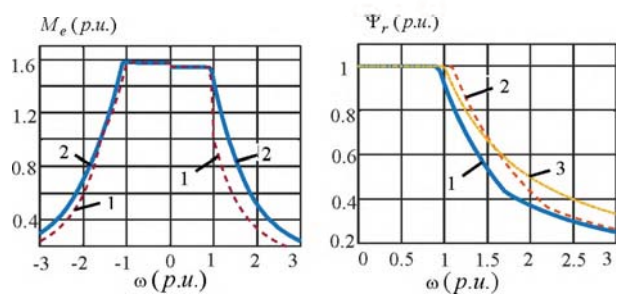

a) b)

Fig. 1. Graphs of the optimal rotor flux (a) and maximum IM torque (b)

The curves of optimal flux for motor mode Ψ_{ro}^m (curve 1) and for generator mode Ψ_{ro}^g (curve 2), as well as classical dependence curve Ψ_{rc} (curve 3) are shown in Fig. 1a. In Fig. 1b shows the peak IM torque, which corresponds to the classical flux (curve 1) and the optimal flux (curve 2).

III. Mathematical Model of Electric Vehicle Motion

Dynamic model of EV can be developed on the basis of Newton's second law [11]. Equation of balance of forces applied to EV is represented by

$$F_{rr} + F_{ad} + F_{gr} + F_{dyn} + F_{in} = F_{dr}\,, \tag{6}$$

where F_{rr} is wheel rolling resistance force; F_{ad} is air resistance force; F_{gr} is gravitational force; F_{dyn} is dynamic force; F_{in} is inertial force of EV parts with rotary motion which equals approximately 5% of inertial force of EV parts with linear motion; F_{dr} is the force created by traction drive.

$$F_{rr} = k_{rr} m_{ev} g \cos\gamma \cdot sign(v)\,, \tag{7}$$

where k_{rr} is the coefficient of rolling resistance; m_{ev} is EV mass; $g = 9.81\, m/s^2$ is gravitational acceleration; γ is the plane inclination angle of the road along which EV moves; v is linear velocity of EV.

$$F_{ad} = 0.5\rho A_F c_d v^2 \cdot sign(v)\,, \tag{8}$$

where $\rho = 1.2\, kg/m^3$ is mean density of the air; A_F is frontal area of EV; c_d is aerodynamic drag coefficient.

$$F_{gr} = m_{ev} g \sin\gamma\,; \qquad F_{dyn} = m_{ev} a\,, \tag{9}$$

where a is linear acceleration of EV; $F_{in} = 0.05 m_{ev} a$. The traction load rated to EV wheels can be determined by

$$F_{dr} = M_e i_{red} r_w^{-1} \eta_{red}\,, \tag{10}$$

where r_w is the wheel radius; i_{red} is gear ratio; η_{red} is gear unit efficiency factor. Now, according to (6)-(10) we can write the expression for EV load torque in motor mode as follows

$$M_L = \frac{r_w}{i_{red}\eta_{red}}\Big((k_{rr} m_{ev} g \cos\gamma + 0.5\rho A_F c_d v^2) sign(v) + m_{ev} g \sin\gamma + 1.05 m_{ev} a\Big). \tag{11}$$

For simplicity, we assume $\eta_{red} \approx 1$. Then, the expression (11) is also true for generator mode at braking of EV.

EV inertia rated to the drive shaft can be calculated

$$J_{ev} = m_{ev} r_w^2 / i_{red}^2 + J_{red} + 4 m_w r_w^2 / i_{red}^2\,, \tag{12}$$

where m_w is wheel mass; J_{red} is gear unit inertia which is usually assumed as $J_{red} \approx J_r$. In Table AII of the Appendix, the test EV data for our research are presented. By using these data according to (12) we can calculate inertia $J_{ev,\max}$ for maximum vehicle mass $m_{ev,\max}$ and $J_{ev,\min}$ for minimum vehicle mass $m_{ev,\min}$ Then we can calculate maximum $J_{\max} = J_{ev,\max} + J_r = 11.87\, kg \cdot m^2$ and minimum $J_{\min} = J_{ev,\min} + J_r = 8.94\, kg \cdot m^2$ total inertia of the drive. The mean value of total inertia is calculated as $J_{\text{med}} = (J_{\max} + J_{\min})/2 = 10.41\, kg \cdot m^2$. This value is used below for tuning of a speed regulator in IM control system.

IV. IM CONTROL SYSTEM OF EV

An self-controlled EV was chosen for IM control system design, which determined the structure of a motor speed control system. The block diagram of the proposed IM control system of EV is presented in Fig. 2. This is an IM DFOC system [1] that includes a Speed Regulator (SR), a Flux Regulator (FR), a Speed Sensor (SS), a Field Weakening Control Block (FWCB) and a Vector Control Block (VCB).

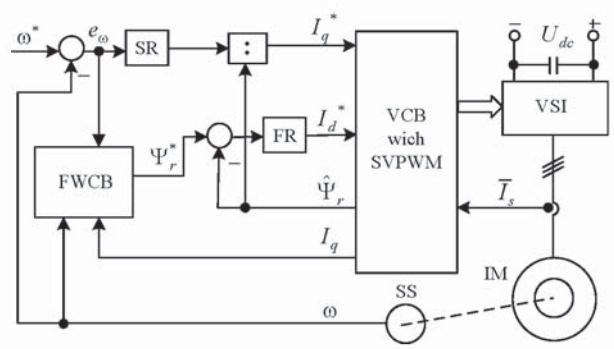

Fig. 2. Block diagram of the proposed EV IM control system

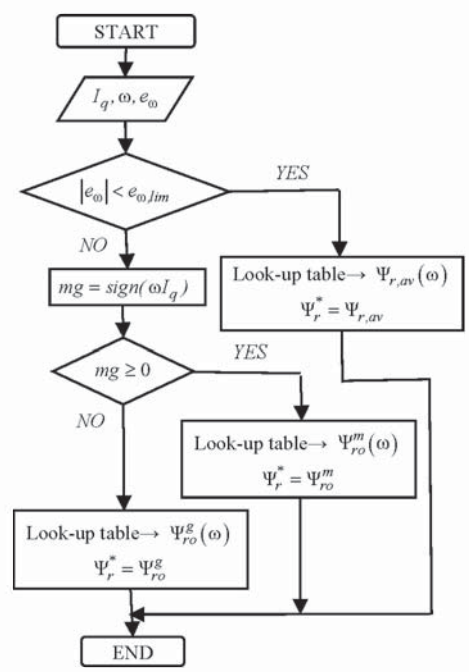

Fig. 3. Flow-chart of field weakening control algorithm

In turn, the VCB includes two current regulators, the inputs of which receive reference signals I_d^*, I_q^*, decoupling block and converters of signals from moving reference

frame (d,q) in stationary (α,β) and vice versa. Also, the VCB include an estimator of the rotor flux vector, which determines the estimation of the module $\hat{\Psi}_r$ of the vector $\bar{\Psi}_r$ and its angle. This estimator takes into account the saturation of the IM main flux linkage and it is described in [10]. Note that all four regulators in the system are of type PI with anti-windup structure.

The purpose of the FWCB is to create a rotor flux linkage reference Ψ_r^*, which optimizes the IM torque at field weakening. Fig. 3 shows a flow-chart of the algorithm of the FWCB. In this block there are look-up tables with the curves $\Psi_{ro}^m(\omega)$ and $\Psi_{ro}^g(\omega)$ shown in Fig.1a, as well as the look-up table with their arithmetic mean value $\Psi_{r,av}(\omega)$. His work is as follows. When the EV performs acceleration or braking and the speed error e_ω exceeds the threshold $e_{\omega,lim}$, then the motor operation mode indicator mg is determined. In the case of a motor mode $(mg \geq 0)$ the value of Ψ_{ro}^m is selected from the look-up table, and in the case of the generator mode $(mg < 0)$ – the value of Ψ_{ro}^g is selected from the look-up table. Next, the corresponding value becomes a reference Ψ_r^* for FR. If e_ω does not exceed the threshold, the average value $\Psi_{r,av}$ is selected from the look-up table and given to the FR. At that, the IM torque will be less than the maximum possible.

It should be noted that the algorithm was studied only with two curves of the optimal rotor flux and without setting the threshold for the speed error. In this case, in the transition of the EV from acceleration or braking to movement at a constant speed in the system there were self-oscillations with periodic switching between Ψ_{ro}^m and Ψ_{ro}^g. So the system lost its ability to work. However, setting the threshold for the speed error and using of the average curve of the optimal flux in accordance with the scheme in Fig. 3 avoids the effect of self-oscillations.

V. SIMULATION RESULTS

Dynamic properties of EV induction motor control system with torque maximization in the field weakening region were studied by mathematical simulation in the software Matlab/Simulink. For IM an extended model was used in coordinates (α,β). Control part model was developed based on DFOC principles as shown in the diagram in Fig. 2. Motor's load torque M_L was determined according to (11).

The research involved simulating EV horizontal movement ($\gamma = 0$) in accordance with the diagram given. The movement diagram consisted of two acceleration sections, two braking sections, and three sections of steady state mode in EV high speed range of up to $v = 120\ km/h$.

Initially, the fully loaded EV, and IM current limitation $I_{max} = 1.5 p.u.$ were studied. The simulation results obtained by means of the classic algorithm of the motor field weakening $\Psi_r(\omega) = \Psi_{rc}(\omega)$ are presented in Fig. 4, and the ones obtained by means of the proposed optimal algorithm are given in Fig. 5. In these figures v^* stands for EV speed reference, and $\Psi_{r\alpha}$ is the phase rotor flux linkage.

In analyzing Fig. 5 we can notice the good quality of transient processes in stator voltage and current limitation modes. Comparison of Fig. 4c and Fig.5c will demonstrate that the IM torque is higher during acceleration and braking if the optimal algorithm of field weakening control is applied.

Then, a similar research was carried on for unloaded EV, and IM current limitation $I_{max} = 2.0 p.u.$ The first acceleration period t_1, the first braking period t_2, the second acceleration period t_3 and the second braking period t_4 for four options of EV mass and IM current limitation were determined according to graphs $v(t)$. The results are presented in Table I as fractions, where numerator corresponds to the EV IM control system with the classic algorithm of field weakening, and denominator – with the optimal algorithm.

TABLE I. EV ACCELERATION AND BRAKING TIME PERIODS

EV mass and IM current limit		Time of EV movement intervals			
m_{ev} (kg)	$I_{\max}$ $(p.u.)$	t_1 (s)	t_2 (s)	t_3 (s)	t_4 (s)
900	***1.5***	25.8/17.0	5.46/5.01	26.8/13.5	13.9/13.1
650	***1.5***	19.5/13.7	4.22/3.86	18.1/9.7	10.7/10.1
900	***2.0***	25.5/16.2	5.1/4.34	26.8/13.2	11.9/10.8
650	***2.0***	19.5/13.5	4.0/3.34	18.1/9.6	9.16/8.3

Reduced acceleration and braking time periods $\Delta t_1,...,\Delta t_4$ were calculated in percentage on the basis of the table data, and the resulting data are presented in Table II.

TABLE II. REDUCED EV ACCELERATION AND BRAKING TIME PERIODS

EV mass and IM current limit		Reduced EV movement time			
$m_{ev}(kg)$	$I_{\max}(p.u.)$	Δt_1 (%)	Δt_2 (%)	Δt_3 (%)	Δt_4 (%)
900	***1.5***	34	8.24	49.6	5.76
650	***1.5***	29.7	8.5	46.4	6.0
900	***2.0***	36.5	14.9	50.7	9.2
650	***2.0***	30.8	16.5	47.0	9.39

Distances l_i covered by EV in a time period of t_i were calculated by integration of speed $v(t)$ in acceleration and braking intervals as

$$l_i = \int_0^{t_i} v(t)\,\mathrm{d}t, \qquad i = 1,...,4\,. \tag{13}$$

The obtained values of acceleration and braking distances are presented in Table III in fractions, where numerator corresponds to the classic algorithm of field weakening and denominator to the optimal one.

Reduced distances covered by EV in acceleration and braking intervals $\Delta l_1,...,\Delta l_4$ were calculated on the basis of the

table data, and the results obtained are presented in Table IV.

On the basis of the research results presented in the tables we can point out the following statements. In the suggested EV IM control system, the maximum torque with stator volt-age and current limitation has been achieved by applying the optimal algorithm of field weakening control. As a result, there is an increase in the EV acceleration and braking intensity and, therefore, the dynamics performance of the EV IM control system are improved.

TABLE III. EV ACCELERATION AND BRAKING DISTANCES

EV mass and IM current limit		Distances covered by EV			
m_{ev} (kg)	I_{max} (p.u.)	l_1 (m)	l_2 (m)	l_3 (m)	l_4 (m)
900	***1.5***	542/316	140/128	754/374	265/242
650	***1.5***	340/241	108/98.3	506/268	205/187
900	***2.0***	540/305	131/111	754/368	240/208
650	***2.0***	388/236	103/85.5	506/265	185/161

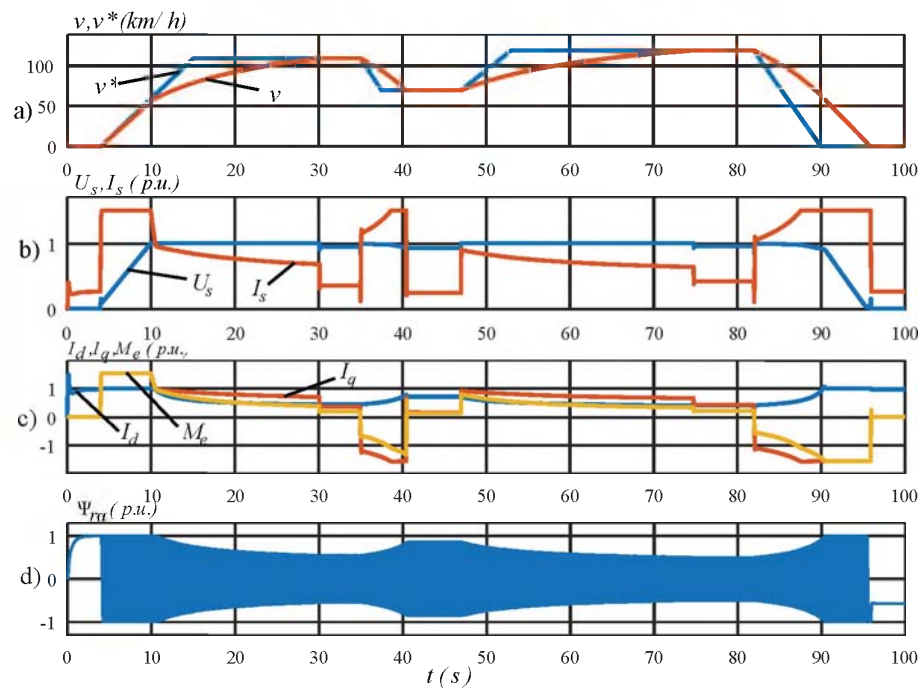

Fig. 4. Transient and steady state processes in EV IM control system with the classic algorithm of field weakening

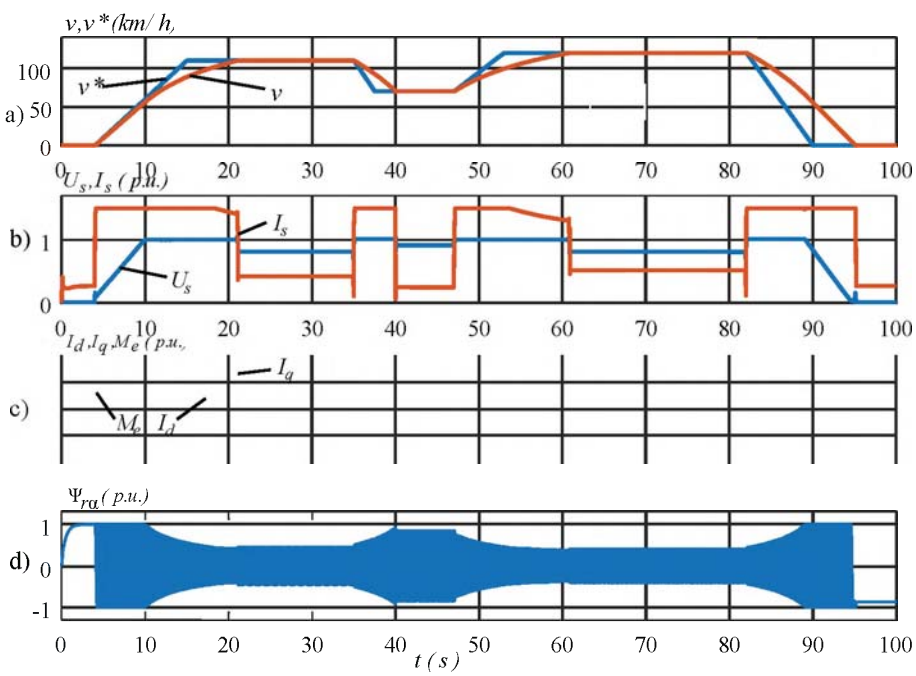

Fig. 5. Transient and steady state processes in EV IM control system with the optimal algorithm of field weakening

TABLE IV. REDUCED DISTANCES OF EV ACCELERATION AND BRAKING

EV mass and IM current limit		Reduced distances covered by EV			
$m_{ev}(kg)$	$I_{max}(p.u.)$	Δl_1 (m)	Δl_2 (m)	Δl_3 (m)	Δl_4 (m)
900	**1.5**	226	12	380	23
650	**1.5**	99	9.7	238	18
900	**2.0**	235	20	386	32
650	**2.0**	152	17.5	241	24

VI. CONCLUSIONS

The paper presents the new results obtained in the area of EV IM control system design. The optimal algorithm of field weakening control has been developed, which maximizes IM torque and provides high quality of controlled processes. Due to IM torque maximization in high-speed region, the intensity of acceleration and braking has been increased and, accordingly, the EV dynamics properties have been improved. The simulation results of the suggested system have demonstrated that depending on the EV mass and the stator current limit the acceleration time in test EV has been reduced by 30-50%, while the braking time – by 5-16%. Accordingly, the acceleration distance has been shortened by 100-380 m, and the braking distance – by 10-24 m. The obtained effect confirms the prospects of the proposed EV IM control system.

APPENDIX

Rated parameters of motor are given in Table AI, where P – output power, U, I – the voltage and current of phase stator (rms), f, N – the supply frequency and number of revolutions of the motor shaft.

TABLE AI. DATA OF MOTOR

$P=30\ kW$	$U=220\ V$	$I=56.8\ A$	$f=50\ Hz$
$N=1467\ min^{-1}$	$cos\varphi=0.88$	$R_s = 0.1376\ \Omega$	$R_r = 0.086\ \Omega$
$R_z = 187\ \Omega$	$L_s = 43.14\,mH$	$L_r = 43.6\,mH$	$L_m = 41.8\,mH$

The values of the EV parameters are given in Table AII.

TABLE AII DATA OF ELECTRIC VEHICLE

Rated speed of EV, km/h	*60*
Maximum speed of EV, km/h	*120*
Rated power of motor, kW	*30*
Gross laden mass of EV with battery $m_{ev,max}$, *kg*	*900*
Gross empty mass of EV with battery $m_{ev,min}$, *kg*	*650*
Wheel mass m_w, *kg*	*18*
Wheel radius r_w, *m*	*0.35*
Gear ratio i_{red}	*3.23*
Coefficient of rolling resistance k_{rr}	*0.02*
Frontal area of EV A_F, m^2	*1.65*
Aerodynamic drag coefficient c_d	*0.2*

REFERENCES

[1] D.W. Novotny, and T.A. Lipo, Vector control and dynamics of AC drives, Oxford: Clarendon Press, 2005.

[2] M. Bodson, J.N. Chiasson, and R.T. Novotnak, "A systematic approach to selecting flux references for torque maximization in induction motors", IEEE Trans. on Control Sys.Technol., Vol.3, no.4, pp. 388 -397, 1995.

[3] D. Casadei, G. Serra, A.Tani, L. Zarri, and F. Profumo, "Performance analysis of a speed-sensorless induction motor drive based on a constant-switching-frequency DTC scheme", IEEE Trans. Ind. Applicat., vol. 39, no 2, pp. 476-484, 2003.

[4] S. Lim, and K. Nam, "Loss-minimizing control scheme for induction motors", Proc. Inst. Elect. Eng., vol. 151, no. 4, pp. 385-397, 2004.

[5] G. Gallegos-Lopez, F.S. Gunawan, and J. E. Walters, "Current control of induction machines in the field-weakened region", IEEE Trans. Ind. Applicat., vol. 43, no.4, pp. 981-989, 2007.

[6] M. Mengoni, L. Zarri, A. Tani, G. Serra, and D. Casadei, "A comparison of four robust control schemes for field-weakening operation of induction motors", IEEE Trans. Power Elec., vol. 27, no.1, pp. 307-320, 2012.

[7] L. Zarri, M. Mengoni, A Tani, G. Serra, D. Casadei and J.O. Ojo, "Control schemes for field weakening of induction machines: A review", Proc. IEEE Workshop in Electrical Machines Design, Control and Diagnosis (WEMDCD), pp. 146-155, 2015..

[8] L Z. Dong, Y. Yu, B. Wang, Q. Dong, and D. Xu., "Optimized Flux-Weakening Control of Induction Motor for Torque Enhancement in Voltage Extension Region", Proc. IEEE Intern. Power Electronics Conf. (IPEC), pp. 459-465, 2018.

[9] B. Pryymak, and M. Moreno-Eguilaz, "Characteristics of induction motor drives with torque maximization in field weakening region", Proc. IEEE First Ukraine Conf. on Electrical and Computer Engineering (UKRCON), pp. 508-513, 2017.

[10] B.I. Pryymak, "Induction motor rotor flux estimation into account the nonlinearity of magnetic circuit", Technical Electrodynamics, no.4, pp. 51-57, 2005. (In Ukrainian).

[11] D. W. Gao, C. Mi, and A. Emadi, "Modeling and simulation of electric and hybrid vehicles", Proc. IEEE, vol. 95, no. 4, pp. 729-745, 2007.